Analysis and Design of LCL-Type Series Resonant Converter

Ashoka K. S. Bhat, *Senior Member, IEEE*

***Abstract*—A series resonant converter modified by adding an inductor in parallel with the transformer primary (or secondary) is presented. This configuration is referred to as an "LCL-type series resonant converter." A simplified steady-state analysis using complex ac circuit analysis is presented. Based on the analysis, a simple design procedure is given. Detailed experimental results obtained from a MOSFET-based 640 W converter are presented to verify the analysis. A narrow variation in switching frequency is required to regulate the output voltage for a very wide change in load, and the converter has load short-circuit capability. It is shown that by placing the parallel inductor on the secondary side, the parasitics of the high-frequency transformer can be used profitably.**

I. Introduction

DC/DC converters are widely used in telecommunication and other electronic power systems. A literature survey of such converters is given in [1]. Due to the advantages of high-frequency (HF) resonant converters, they are finding application as power supplies in telecommunication [1], [3], [8], [9] and other electronic systems. The most popular resonant converter configurations are [2], [3], [5], [13] series resonant and parallel resonant. A series resonant converter has a voltage regulation problem at light loads, whereas a parallel resonant converter has lower efficiency at reduced loads due to circulating currents [2], [5]. In an attempt to overcome these problems, a number of new configurations have been reported [1], [4], [6]–[9]. Although a series–parallel resonant converter (or LCC-type parallel resonant converter) [1], [4], [5] overcomes most of the problems of series and parallel resonant converters, the load-independent point of such a configuration lies below resonance. Hence, this type of converter requires a wider change in switching frequency from full load to open-circuit operation for the above resonance (lagging power factor) mode without sacrificing efficiency of the converter [1], [5]. Efficiency at light loads decreases because the converter takes the characteristics of a parallel resonant converter for the values of components selected [5].

A series resonant converter has high efficiency from full load to very light loads. To overcome the problems of light load regulation of a series resonant converter, modified series resonant converters have been proposed in [8], [9]. They suffer either from wide frequency control requirement [9] or poor efficiency [8]. Using the magnetizing inductance of the HF transformer, a series resonant converter with inductive output filter has been analyzed in [10], [11]. Analysis for below resonance (leading power factor) mode of operation has been presented using the state-plane approach. In this paper, a modified series resonant converter is presented. An inductor is placed in parallel with the transformer primary or secondary winding. The magnetizing inductance of the HF transformer can be used as part of this parallel inductor. This converter is referred to as the "LCL-type series resonant converter." Although it has been pointed out in [7], [12] that such a converter has load-independent characteristics, there is no analysis or design procedure available. It is shown in this paper that this type of converter requires a very narrow range of frequency control from full load to very light loads, and can operate with load short circuit while possessing the desirable features of the series resonant converter. It has been shown [5] that a resonant converter operating in the above resonance (lagging power factor) mode has a number of advantages (e.g., no need for lossy snubbers and di/dt limiting inductors) [5]. Therefore, the proposed converter configuration is operated in the above resonance mode. The objectives of this paper are to present the analysis, design, and experimental results for such a converter.

The layout of the paper is as follows. Section II presents the detailed operation of an LCL-type series resonant converter operating above resonance. A simple analysis using complex circuit analysis is presented in Section III. A design method is presented together with a design example of a 48 V, 500 W output converter in Section IV. Experimental results obtained from an experimental converter rated at 640 W with 54 V output are presented in detail in Section V to verify the theory.

II. Operation of LCL-Type Resonant Converter in Above Resonance Mode

Fig. 1 shows the basic circuit diagram of the proposed LCL-type series resonant converter. The operation of this converter operating in the above resonance mode can be understood by referring to the waveforms shown in Fig. 2. Under steady-state conditions, assume that the diode $D1$ is carrying the resonating current. When the current through this diode goes to zero, $S1$ is turned on. This results in negligible turn-on losses since the voltage across $S1$ is also zero at turn on. A resonant current flows through $S1$, L_r, and C_s. When $S1$ is turned off at the end of half period, i.e., T_s $(= 1/(2f_t))$, where f_t is the triggering or switching frequency), diode $D2$ turns on, taking the current carried by $S1$. Operation during the next half cycle is similar to the first half cycle with the $D2S2$ pair.

Manuscript received July 21, 1991; revised June 12, 1993. This paper is a revised version of a paper presented at the IEEE International Telecommunications Energy Conference, Orlando, FL, 1990.

The author is with the Department of Electrical Engineering, University of Victoria, Victoria, BC, V8W 3P6, Canada.

IEEE Log Number 9214352.

0090-6778/94$04.00 © 1994 IEEE

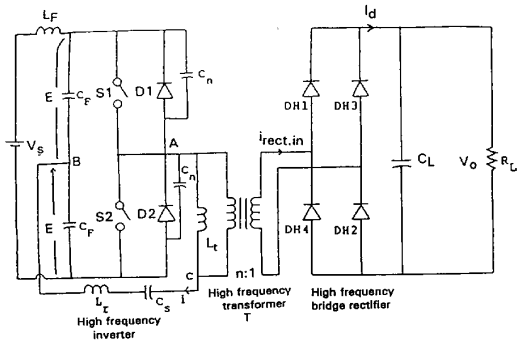

Fig. 1. A dc/dc high-frequency link LCL-type series resonant converter suitable for operation above resonance. Here, the half-bridge version is shown. (Switches $S1$ and $S2$ are high-frequency switches.)

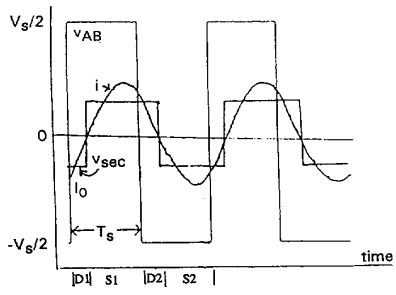

Fig. 2. Waveforms at different points in the LCL-type series resonant converter of Fig. 1 for operation above resonance.

It is clear that there are turn-off losses associated with this type of operation. Hence, it is necessary to use switches with fast turn-off times.

Since the filter capacitor C_L is large enough to maintain a constant voltage across the load R_L, the transformer secondary voltage is a square wave whose polarity changes approximately at the instant of change in polarity of current i. The parasitic capacitances of the output rectifier diodes come in parallel with C_L, and therefore they are used as part of C_L. Also, as shown in Section III, the leakage inductances of the HF transformer can be used as part of resonating inductance L_r. In the case of pulsewidth-modulated (PWM) converters, parasitic capacitances of the output rectifier diodes and the HF transformer leakage inductances generate oscillations, and these oscillations are suppressed by lossy snubbers [14].

III. Steady-State Analysis of LCL-Type Series Resonant Converter

The steady-state analysis of an LCL-type series resonant converter is presented in this section using complex ac circuit analysis. This analysis is reasonably accurate if the converter is operated above resonance and if the waveforms are nearly sinusoidal. The converter gain, the inverter output peak current, the component ratings, and the region of above resonance operation are obtained.

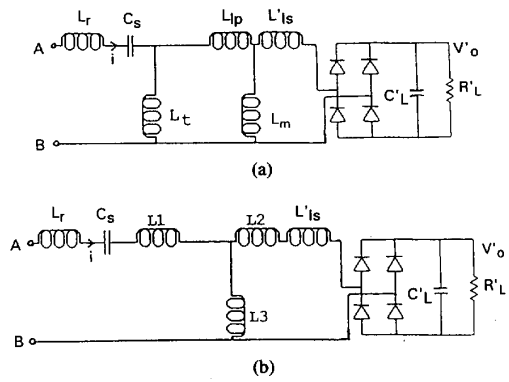

Fig. 3. (a) Equivalent circuit at the output of the inverter terminals (across AB) including the effect of a high-frequency transformer when L_t is placed across the primary side. (b) Simplified circuit of (a) after Δ-Y transformation.

Assumptions used in the analysis are presented in Section III-A. Section III-B presents the modeling of the converter. The steady-state analysis of the converter is presented in Section III-C.

A. Assumptions Used in the Analysis

The following assumptions are used in the analysis presented in this section.

1) The switches, diodes, inductors, and capacitors used are ideal.

2) The effect of snubber capacitors is neglected.

3) The high-frequency transformer is represented by a T-equivalent circuit.

4) Only fundamental components of the waveforms are used in the analysis.

B. Modeling of the Converter

The inductor L_t can be placed either on the primary side or on the secondary side of the HF transformer.

1) Inductor L_t on Primary Side: Fig. 3(a) shows the equivalent circuit across AB, where the HF transformer is represented by its T-equivalent circuit. L_{lp}, L'_{ls}, and L_m are the leakage inductance of primary, primary referred leakage inductance of the secondary, and the magnetizing inductance of the transformer, respectively. The actual parallel inductor used is L_t.

Using the Δ-Y transformation to the L_t, L_{lp}, and L_m circuit, the simplified equivalent circuit shown in Fig. 3(b) is obtained. In this circuit,

$$L1 = L_{lp}L_t/(L_{lp} + L_t + L_m),$$

$$L2 = L_{lp}L_m/(L_{lp} + L_t + L_m) \quad (1)$$

$$L3 = L_tL_m/(L_{lp} + L_t + L_m). \quad (2)$$

The effective series resonating inductor has a value of

$$L_s = L_r + L1 \quad (3)$$

where L_r is the externally added inductor. The actual parallel inductor has a value of

$$L_p = L3. \quad (4)$$

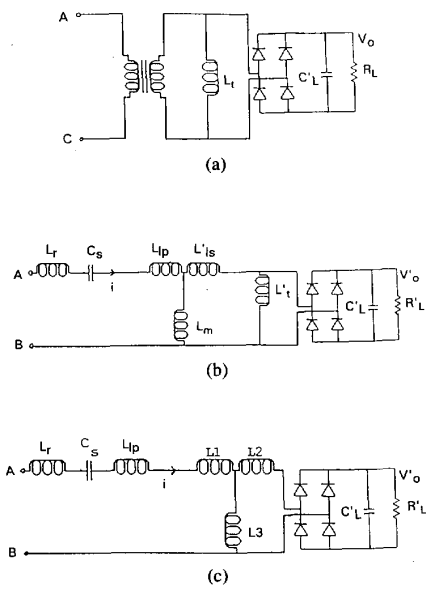

Fig. 4. (a) Modifications required in Fig. 1 when the parallel inductor is placed on the secondary side of the high-frequency transformer. (b) Equivalent circuit at the output of the inverter terminals (across AB) including the effect of a high-frequency transformer when L_t is placed across the secondary side. (c) Simplified circuit of (b) after Δ-Y transformation.

2) Inductor L_t on Secondary-Side: The modification required when the parallel inductor L_t is placed across the secondary side of the HF transformer is shown in Fig. 4(a). In this case, the equivalent circuit across AB can be written as shown in Fig. 4(b). Fig. 4(c) shows the simplified circuit after Δ-Y transformation to the L_m, L'_{ls}, and L'_t $(= n^2 L_t)$ network. In Fig. 4(c),

$$L1 = L'_{ls} L_m / (L'_{ls} + L'_t + L_m),$$
$$L2 = L'_{ls} L'_t / (L'_{ls} + L'_t + L_m) \quad (5)$$
$$L3 = L'_t L_m / (L'_{ls} + L'_t + L_m). \quad (6)$$

The effective series resonating inductor and the effective parallel inductor have values of

$$L_s = L_r + L_{lp} + L1, \qquad L_p = L3. \quad (7)$$

From Figs. 3(b) and 4(c), it can be observed that whether the inductor L_t is placed on the primary side or on the secondary side, the equivalent circuit at the output terminals AB of the inverter can be represented by Fig. 5(a). However, the values of L'_2 and $L1$ differ in the two cases. The corresponding ac equivalent circuit (or phasor circuit) is shown in Fig. 5(b). The rectifier, filter, and load block is replaced by the ac resistance R_{ac} given by [5]

$$R_{\text{ac}} = K R'_L \quad (8)$$

where $K = 8/(\pi^2)$ and $R'_L = n^2 R_L$.

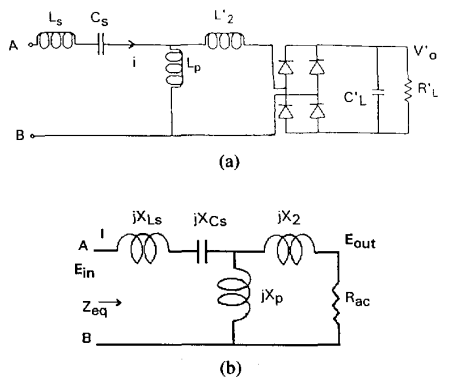

Fig. 5. (a) Equivalent circuit at the output of the inverter whether L_t is placed on the primary side (Fig. 1) or on the secondary side [Fig. 4(a)]. Note that $L'_2 = L2 + L'_{ls}$ for Fig. 3(b) and $L'_2 = L2$ for Fig. 4(c). (b) Model used for the analysis of the LCL-type series resonant converter shown in Fig. 1. (Note: $X_p = w_t L_p$.)

C. Analysis

The different impedances and symbols used are defined below.

The triggering or switching frequency of the converter is

$$\omega_t = 2\pi f_t \quad \text{rad/s}. \quad (9)$$

All the reactances are represented by letter X, and the subscripts are used to represent a particular element. For example, the reactances of L_s, C_s, the branch containing L_s and C_s, and L'_2 are represented by X_{Ls}, X_{Cs}, X_s, and X_2, respectively, where

$$X_{Ls} = \omega_t L_s\,\Omega, \qquad X_{Cs} = -1/(\omega_t C_s)\,\Omega,$$
$$X_s = (X_{Ls} + X_{Cs})\,\Omega, \qquad X_2 = \omega_t L'_2\,\Omega. \quad (10)$$

Normalized switching frequency y_s is

$$y_s = f_t / f_s \quad (11)$$
$$\omega_s = 2\pi f_s = 1/(L_s C_s)^{1/2} \quad \text{rad/s}. \quad (12)$$

In order to simplify the presentation, all the quantities are expressed in per unit and the following are chosen as the base values:

1) base voltage, $V_B = E = V_s/2$ V
2) base impedance, $Z_B = R'_L\,\Omega$
3) base current, $I_B = V_B / R'_L$ A.

All the per unit (p.u.) values are represented by an additional subscript "o" and the phasor quantities are denoted by bold letters.

The voltage gain in Fig. 5(b) can be derived as

$$\boldsymbol{E}_{\text{out}} / \boldsymbol{E}_{\text{in}} = 1/(D_1 + jD_2) \quad (13)$$

where

$$\boldsymbol{E}_{\text{in}} = V_s/2 \quad \text{V} \quad (14)$$
$$D_1 = 1 - (X_{so}/K)[bK + aX_{2o}] \quad (15)$$
$$D_2 = X_{2o}/K - (b/K) X_{so} X_{2o} + aX_{so} \quad (16)$$
$$a = K/[K^2 + X_{2o}^2] \quad (17)$$

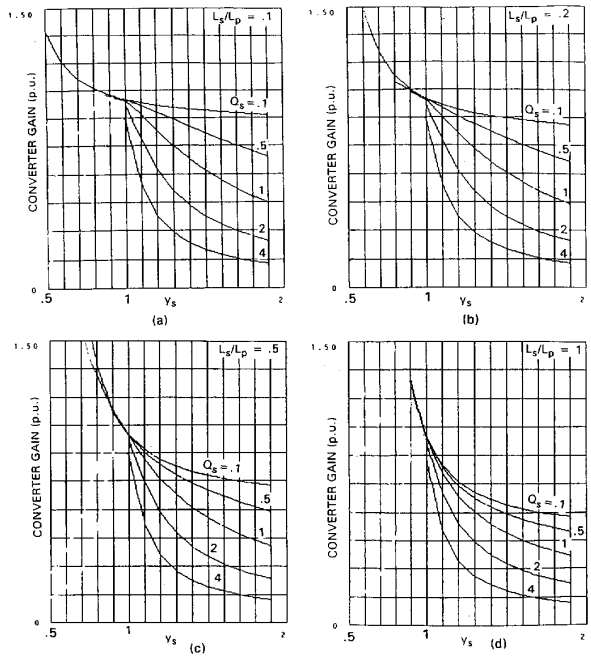

Fig. 6. The converter gain M (p.u.) (normalized output voltage) versus normalized switching frequency (y_s) of LCL-type series resonant converter operating above resonance for different inductor ratios of L_s/L_p.

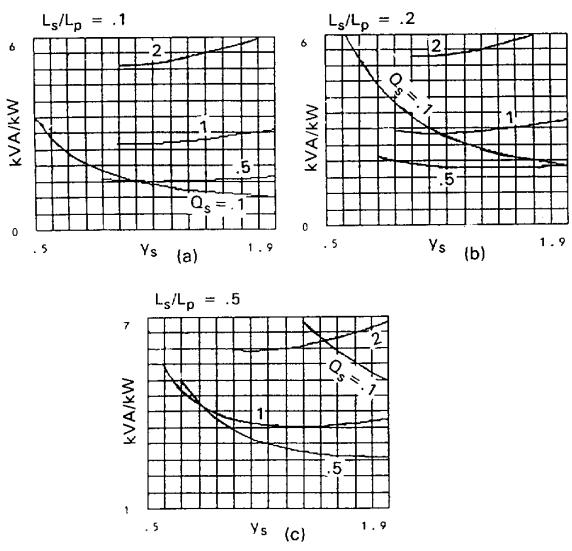

Fig. 7. Total kVA rating of tank circuit per kilowatt of output power for variation in y_s for various inductor ratios.

$$b = -1/X_{Lpo} - X_{2o}/[K^2 + X_{2o}^2] \tag{18}$$

$$X_{so} = Q_s y_s - Q_s/y_s \quad \text{p.u.} \tag{19}$$

$$X_{Lpo} = Q_s y_s (L_p/L_s) \quad \text{p.u.} \tag{20}$$

$$X_{2o} = Q_s y_s (L_2'/L_s) \quad \text{p.u.} \tag{21}$$

$$Q_s = (\omega_s L_s)/R_L' = (L_s/C_s)^{1/2}/R_L'. \tag{22}$$

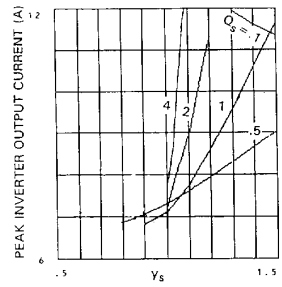

Fig. 8. The peak inverter output current (i.e., current through inductor L_s) versus y_s for an inductor ratio of $L_s/L_p = 0.2$ with an output power of 500 W.

Hence, the actual gain of the converter is given by

$$M = |\boldsymbol{E}_{\mathbf{out}}/\boldsymbol{E}_{\mathbf{in}}|/K_1 \quad \text{p.u.} \tag{23}$$

where $K_1 = (\pi^2/8)K$.

The equivalent impedance Z_{eqo} (in per unit) looking into the terminals AB is given by

$$Z_{\text{eqo}} = (B_1 + jB_2) \quad \text{p.u.} \tag{24}$$

where

$$B_1 = a/(a^2 + b^2) \tag{25}$$

$$B_2 = X_{so} - b/(a^2 + b^2). \tag{26}$$

The peak inverter output current (the same as the current through inductor L_s and capacitor C_s) is given by

$$I_{po} = 4/(\pi \cdot |Z_{\text{eqo}}|) \quad \text{p.u.} \tag{27}$$

The same peak current flows through the switching devices.

The value of initial current I_{0o} is given by

$$I_{0o} = I_{po} \sin(-\phi) \quad \text{p.u.} \tag{28}$$

where

$$\phi = \tan^{-1}[B_2/B_1] \quad \text{rad} \tag{29}$$

where B_1 and B_2 are given by (25) and (26).

If I_{0o} is negative, then forced commutation is necessary and the converter is operating in the above resonance (lagging power factor) mode.

The peak voltage across the capacitor C_s and the peak current through the inductor L_p are

$$V_{cspo} = X_{cso} \cdot I_{po} \quad \text{p.u.} \tag{30}$$

$$I_{Lpo} = |Z_{po}| I_{po}/X_{Lpo} \quad \text{p.u.} \tag{31}$$

where

$$|Z_{po}| = X_{Lpo}/[1 + (X_{Lpo}/K)^2]^{1/2} \quad \text{p.u.} \tag{32}$$

The analysis presented above is used in designing the converter in the next section.

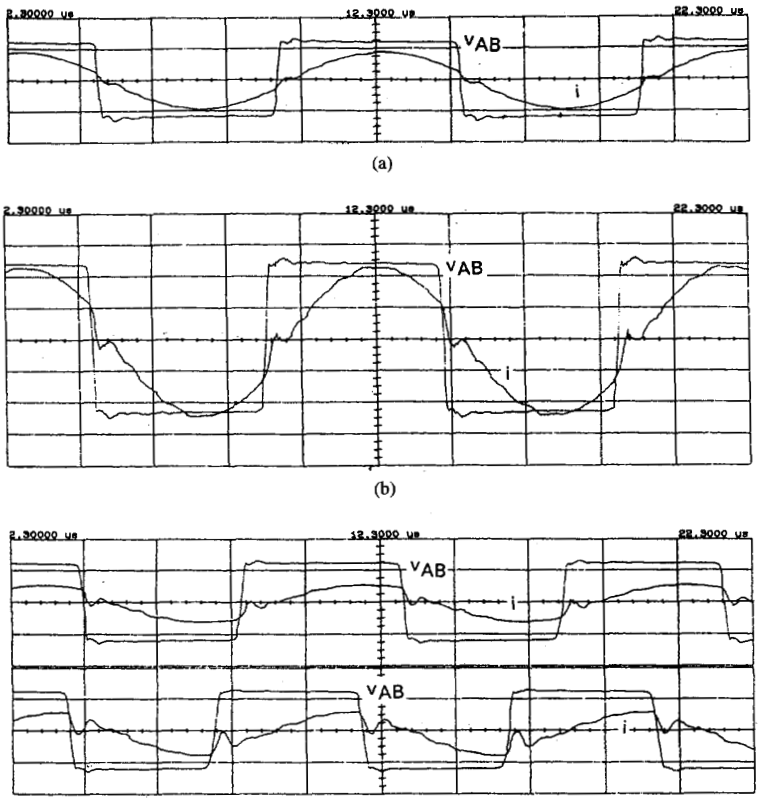

Fig. 9. Experimentally obtained waveforms: v_{AB} and inverter current i. (a) Full load ($R_L = 4.56\,\Omega$), (b) half load ($R_L = 9.26\,\Omega$), (c) $R_L = 21.85\,\Omega$, (d) $R_L = 81\,\Omega$. Voltage scale v_{AB} [50 V/div. in (b) and 100 V/div. in (a), (c), (d)]. Current scale: i [10 A/div. in (a), 2 A/div. in (b) and (d), 4 A/div. in (c)]. (Details of converter: switches used—IRF460 MOSFET's, feedback diodes—internal to the MOSFET's, input dc voltage≅230 V, $L_r \cong 36\,\mu$H, $C_s = 0.0676\,\mu$F, L_t (on secondary side)=44 μH, rectifier bridge diodes—BYW 31/200, $C_L = 10\,\mu$F, HF transformer turns ratio, n =16:7.)

IV. Design

A design procedure is illustrated below with a design example.

It is required to design a 500 W converter with the following specifications:

1) minimum input supply voltage, $V_{s\min} = 230$ V
2) minimum load resistance, $R_L = 4.6\,\Omega$
3) load voltage, $V_o = 48$ V
4) switching frequency at full load with minimum input voltage, $f_t = 100$ kHz.

The converter gain (normalized output voltage) of the converter [given by (23)] and the total kVA rating of the tank circuit per kilowatt of output power are plotted in Figs. 6 and 7 for various values of inductor ratios with variations in Q_s and y_s. The region of above resonance was detected using (28). It must be noted that as the ratio L_s/L_p approaches zero, the converter takes the characteristics of an ideal series resonant converter, i.e., voltage regulation at light loads requires a very high switching frequency. As L_s/L_p increases, the frequency variation required for load voltage regulation is small (e.g., see $L_s/L_p = 1$). But the kVA/kW rating increases as the value of inductor ratio increases (Fig. 7). Also, for a given inductor ratio, for higher values of Q_s, the kVA/kW rating of the tank circuit is high. In practice, for reliable operation, enough margin must be given for the switches to turn off, and also to ensure the operation above resonance. Calculations show that for a given Q_s, the inverter output peak current increases as the value of L_s/L_p decreases. These constraints give the following as the near optimum values:

$$L_s/L_p = 0.2, \qquad y_s = 1.$$

Fig. 8 shows the plot of inverter peak output current versus y_s for various values of Q_s for an output power of 500 W. To ensure low peak current at full load, as well as lower peak currents at light loads, a value of $Q_s = 1$ was chosen.

Corresponding to these values,

1) primary referred normalized output voltage=0.9924 p.u.

Taking the minimum value of the input voltage as the base value, $V_B = 115$ V, and taking into consideration the rectifier diode drops,

1) transformer turns ratio required is≅2.2825
2) primary referred load resistance, $R'_L = 24\,\Omega$.

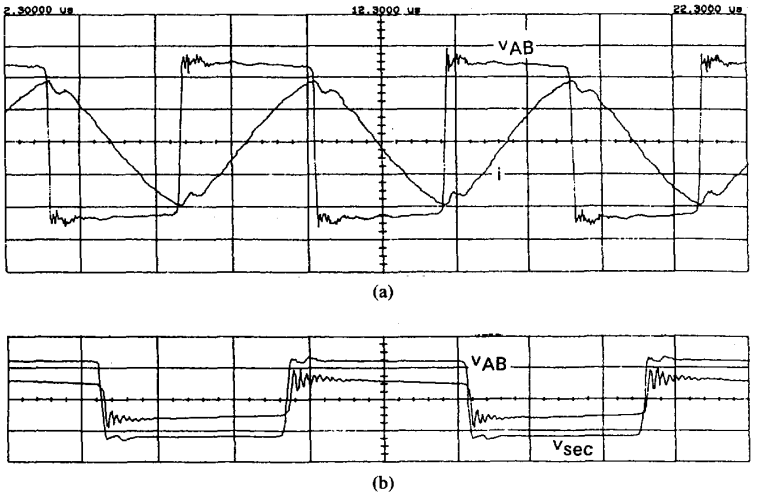

Fig. 10. Experimentally obtained waveforms. (a) v_{AB} (50 V/div.) and inverter output current i (5 A/div.) with a direct short across the load. (b) v_{AB} (100 V/div.) and voltage across the HF transformer secondary (v_{sec}, 100 V/div.) with $R_L = 4.56\,\Omega$. (Details of the converter: same as Fig. 9.)

The values of L_s, C_s, and L_p can be obtained by solving

$$(L_s/C_s)^{1/2} = 1 \times 24\,\Omega$$

and

$$\omega_s = 1/(L_s C_s)^{1/2} = 2\pi \times 100\,000/1\,\text{rad/s}.$$

Solution of the above equations gives

$$L_s \cong 38.2\,\mu\text{H} \quad \text{and} \quad C_s \cong 0.0663\,\mu\text{F}.$$

Since $L_s/L_p = 0.2$ is chosen, $L_p = 191\,\mu$H.

The approximate value of peak current to be carried by the switches, the inductor L_s, and the capacitor C_s is obtained from Fig. 8 as $I_p = 7.1$ A. The peak voltage across C_s and peak current through L_p are [using (30) and (31)]

$$V_{csp} \cong 170.4\,\text{V}.$$

$$I_{Lp}(\text{on primary side}) \cong 1.135\,\text{A}.$$

For a practical 100 kHz transformer having a turns ratio of 16:7, measurements gave the following values:

$$L_{lp} = L'_{ls} \cong 2.6\,\mu\text{H}, \qquad L_m = 1600\,\mu\text{H}.$$

If the parallel inductor is placed on the primary side, then

$$L_p = L3 = 191\,\mu\text{H}.$$

Using (1) and (2),

$$L_t = 217.24\,\mu\text{H}, \qquad L1 = 0.3104\,\mu\text{H}, \qquad L2 = 2.286\,\mu\text{H}.$$

Therefore, $L_r = L_s - L1 = 37.89\,\mu$H.

It can be seen that the effect of the transformer on the value of L_r is negligible, whereas $(L2 + L'_{ls}) = 4.89\,\mu$H is in series with R_{ac}.

If the parallel inductor is placed across the secondary winding, then the value of L_t reflected to the primary side is given by [using (6)]

$$L'_t = 217.24\,\mu\text{H}.$$

Also, using (5),

$$L1 = 2.286\,\mu\text{H}, \qquad L2 = 0.3104\,\mu\text{H}.$$

Therefore, the effect of $L2$ is negligible and the value of L_r required is

$$L_r = L_s - L_{lp} - L1 = 33.314\,\mu\text{H},$$

and the actual value of L_t required on the secondary side is

$$L_t = L'_t/n^2 = 41.7\,\mu\text{H}.$$

Hence, when L_t is placed on the secondary side, the transformer parasitics can be used more profitably.

V. Experimental Results

Experimental results obtained from an experimental LCL-type resonant converter are presented in detail in this section.

The details of the 640 W converter used are given in Fig. 9. The parallel inductor was placed on the secondary side of the HF transformer. The step-down HF transformer used has a turns ratio of 16:7. The transformer was built using two U-cores (manufactured by Tokin Corporation, 2500B2 ferrite material) and has the leakage and magnetizing inductances given in the design example.

The load voltage was regulated to an approximate value of 54 V by increasing the switching frequency (for variations in the load or input supply voltage). The different waveforms obtained are shown in Figs. 9 and 10. Fig. 9 shows the operating waveforms with a fixed input voltage (230 V) for various load conditions (from full load to about 5.6% load). The maximum output power obtained from the converter was

approximately 640 W [Fig. 9(a)]. Since the component values used were not exactly the same as the design values, the output voltage and the output power were higher than the designed values.

It must be noted that the inverter output current decreases with the load. For example, the peak current changes from about 8.7 A at full load [Fig. 9(a)] to less than about 1 A at approximately 5.6% load [Fig. 9(d)]. The frequency variation required to keep the output voltage constant (≅54 V) was about 103 kHz at full load to about 127 kHz at 5.6% load.

A short circuit was applied across the load resistor when the converter was operating with an input voltage of 230 V. The converter can withstand such a short circuit, as demonstrated in Fig. 10(a). The switching frequency corresponding to such a load short circuit was about 143 kHz. The inductor peak current is almost the same as the full load for this condition.

VI. Conclusions

A modified series resonant converter which employs a LCL-type tank circuit and operating above resonance (lagging power factor) mode has been presented. This converter has a number of desirable features, and can be conveniently employed in telecommunication and electronic system power supplies. The converter has been analyzed using complex ac circuit analysis. It has been shown that placing the parallel inductor across the secondary side of the HF transformer takes full advantage of the parasitics of the HF transformer. The leakage and magnetizing inductances are used profitably as part of tank circuit inductors. Also, the value of inductor required on the secondary side for step-down converters is smaller than that required on the primary side. Design curves for converter gain, kVA rating of tank circuit per kilowatt, and inverter output peak current have been obtained. A simple design procedure has been illustrated with a design example. Detailed experimental results obtained from a 640 W, 54 V output experimental unit have been presented to verify the realization of the proposed converter. Compared to a conventional series resonant converter, only a small variation in switching frequency was required to regulate the load voltage from full load to very light load. The inverter peak current decreases with the load, and hence the converter has a high efficiency for wide variation in the load current. The converter can withstand load short circuits without any damage, if the switching frequency is increased slightly above that required for full load operation.

Although the design example and experimental results are presented (to verify the concept) for a converter operating at 100 kHz, the converter presented in this paper can be operated at higher frequencies (few hundreds of kilohertz). An inductive output filter can be used instead of a capacitive output filter. This type of configuration is useful in low-voltage, high-output current applications. The analysis and design procedure presented in this paper can also be extended for this configuration.

References

[1] A. K. S. Bhat, "A 48V output to DC-to-DC resonant converter suitable for telecommunication applications," in *Proc. IEEE INTELEC*, Oct. 1989, pp. 20.4.1–20.4.8.

[2] K. K. Sum, "Recent developments in resonant power conversion," Intertech Communications Inc., 1988.

[3] J. Tips, "A 48 V/100A rectifier, using the switched-mode series-resonance principle," in *Proc. IEEE INTELEC'87*, pp. 109–114.

[4] A. K. S. Bhat and S. B. Dewan, "Analysis and design of a high-frequency link converter using LCC-type commutation," *IEEE Trans. Power Electron.*, vol. PE-2, pp. 291–301, Oct. 1987.

[5] R. L. Steigerwald, "A comparison of half-bridge resonant converter topologies," *IEEE Trans. Power Electron.* vol. 3, pp. 174–182, Apr. 1988.

[6] A. K. S. Bhat, "A unified approach for the steady-state analysis of resonant converters," in *Proc. Int. Conf. Power Electron.*, Tokyo, Japan, Apr. 1990, pp. 191–197.

[7] R. Severns, "Topologies for three element resonant converters," in *IEEE Appl. Power Electron. Conf. Rec.*, Mar. 1990, pp. 712–722.

[8] S. Muroyama and K. Sakakibara, "Characteristics of a new series resonant converter," in *Proc. IEEE INTELEC*, 1982, pp. 111–116.

[9] Y. Kuwata, Y. Ohashi, and K. Yotsumoto, "Characteristics of a new series-resonant converter with a parallel resonant circuit," in *Proc. IEEE INTELEC*, 1987, pp. 204–210.

[10] H. A. Kojori, J. D. Lavers, and S. B. Dewan, "Steady-state analysis and design of an inductor-transformer resonant DC-DC converter," in *IEEE Ind. Appl. Soc. Conf. Rec.*, 1987, pp. 984–989.

[11] H. A. Kojori, J. D. Lavers, and S. B. Dewan, "State-plane analysis of resonant dc-dc converter incorporating integrated magnetics," *IEEE Trans. Magn.*, vol. 24, pp. 2898–2900, Nov. 1988.

[12] E. G. Schmidtner, "A new high frequency resonant converter topology," in *High Frequency Power Conversion Conf. Rec.*, 1988, pp. 390–403.

[13] R. J. King and R. L. Laubacher, "A modified series resonant dc/dc converter," in *IEEE PESC Rec.*, 1986, pp. 343–350.

[14] L. H. Mweene, C. A. Wright, and M. F. Schlecht, "A 1 kW, 500 kHz front-end converter for a distributed power supply system," in *IEEE Appl. Power Electron. Conf. Rec.*, 1989, pp. 423–432.

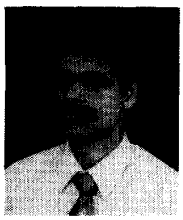

Ashoka K. S. Bhat (S'82–M'85–SM'87) received the B.Sc. degree in physics and mathematics from Mysore University, India, in 1972, the B.E. degree in electrical technology and electronics and the M.E. degree in electrical engineering from the Indian Institute of Science, Bangalore, in 1975 and 1977, respectively, and the M.A.Sc. and Ph.D. degrees in electrical engineering from the University of Toronto, ON, Canada, in 1982 and 1985, respectively.

From 1977 to 1981 he worked as a Scientist in the Power Electronics Group of the National Aeronautical Laboratory, Bangalore, India, and was responsible for the completion of a number of research and development projects. He was also a Research Scholar at the Indian Institute of Science during 1980–1981. After working as a Postdoctoral Fellow for a short time, he joined the Department of Electrical Engineering, University of Victoria, BC, Canada, where he is currently a Professor of Electrical Engineering and is engaged in teaching and conducting research in the area of power electronics. He has been responsible for the development of the Electromechanical Energy Conversion and Power Electronics Laboratories.

Dr. Bhat is a Fellow of the Institution of Electronics and Telecommunication Engineers (India) and a member of the Association of Professional Engineers of British Columbia.